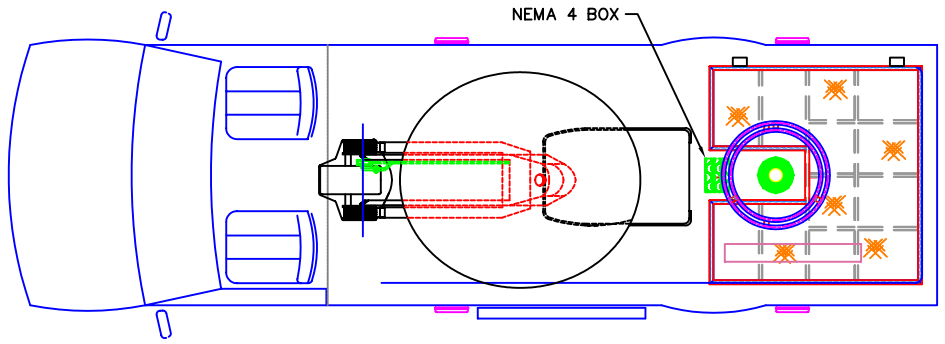

TOP VIEW

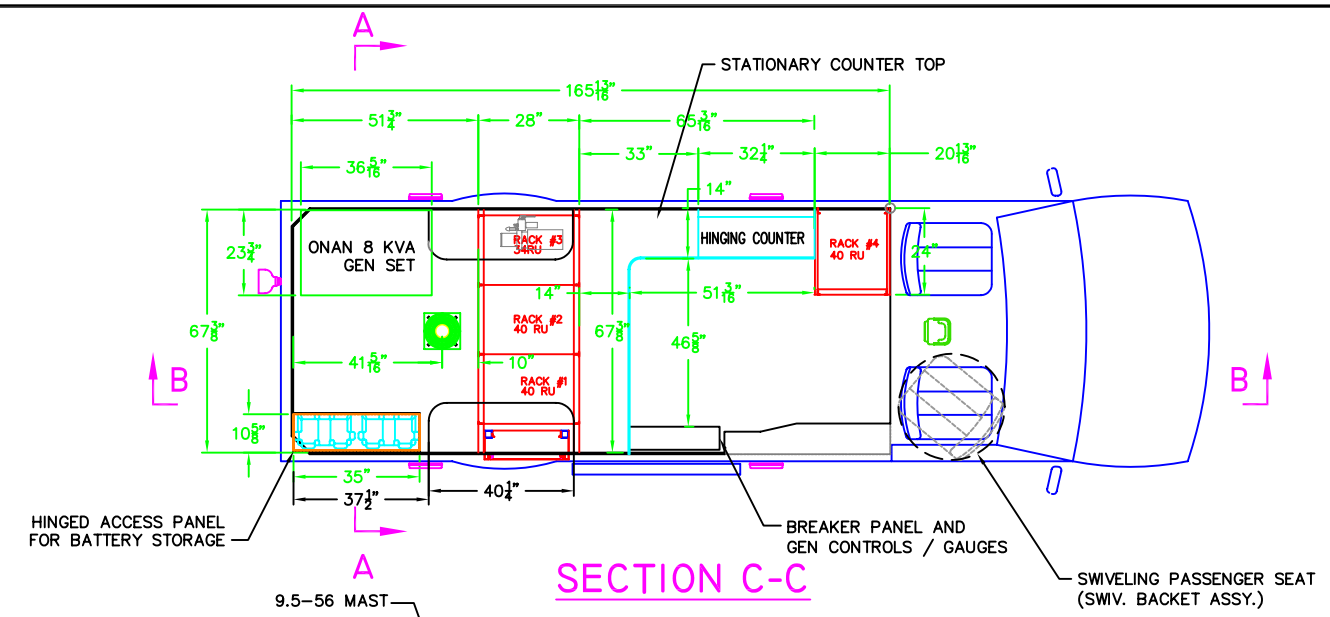

SECTION C-C

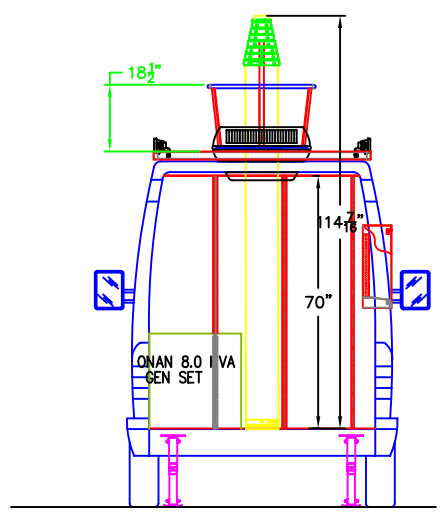

SECTION A-A

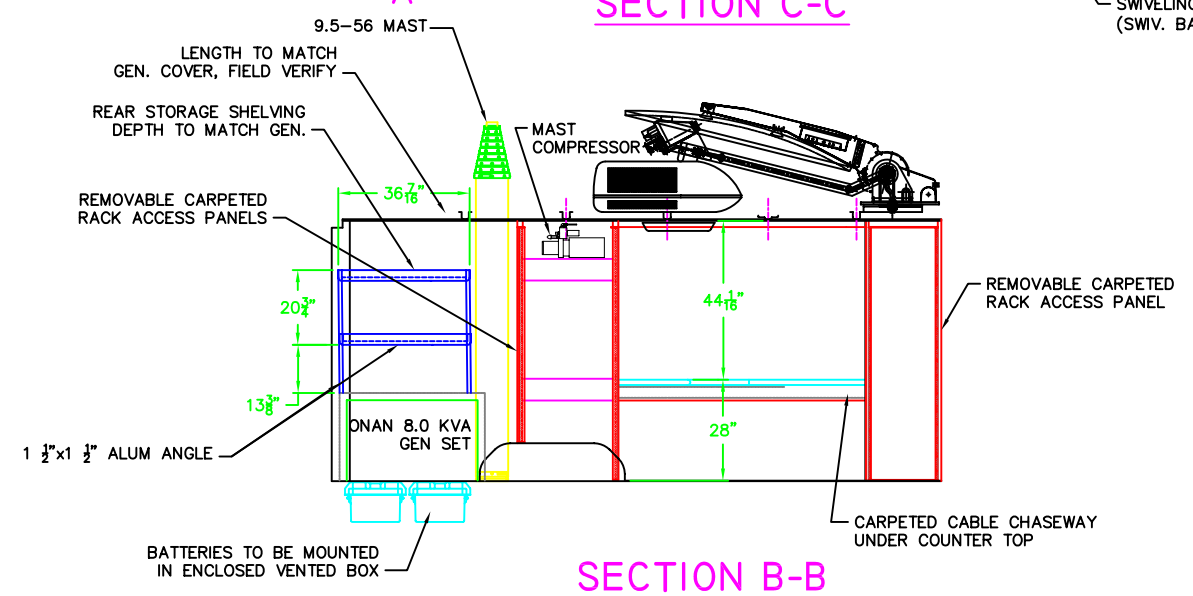

SECTION B-B

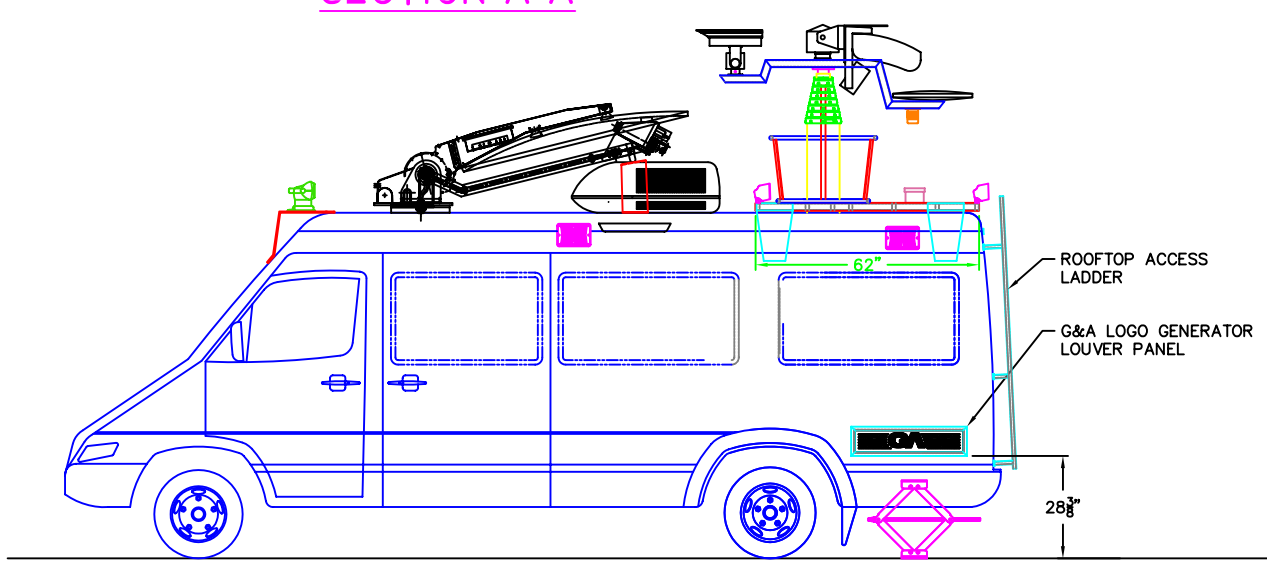

PARTIAL STREETSIDE VIEW

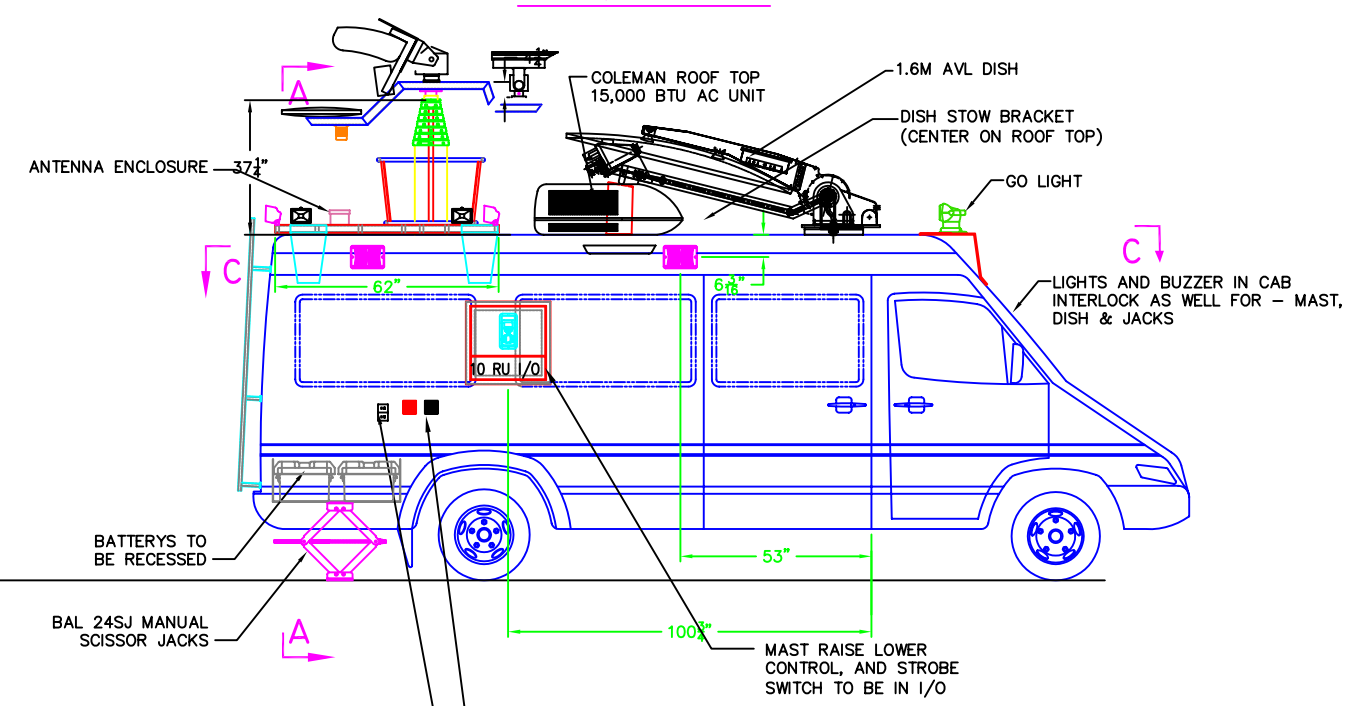

CURBSIDE VIEW

#	DATE	REVISIONS	DWN BY

FINAL APPROVED BY	DATE
GERLING & ASSOCIATES	
CLIENT	
ENGINEERING	

THIS DRAWING AND ALL INFORMATION CONTAINED HEREIN, IS THE PROPERTY OF GERLING AND ASSOCIATES AND MAY NOT BE COPIED, REPRODUCED OR DIVULGED TO UNAUTHORIZED PERSONS WITHOUT THE EXPRESS WRITTEN CONSENT OF GERLING AND ASSOCIATES.

CLIENT CSN			GERLING AND ASSOCIATES
DRAWN BY SPC	DATE 3/4/07		ENG/DSNG-FL SPRINTER-22-80 TV UPLINK FLOOR PLAN ASSY
CHECKED BY	DATE		
APPROVED BY	DATE		
SCALE 1-32	SIZE D	DRAWING NO PROJECT #590	SHEET 1 OF 1